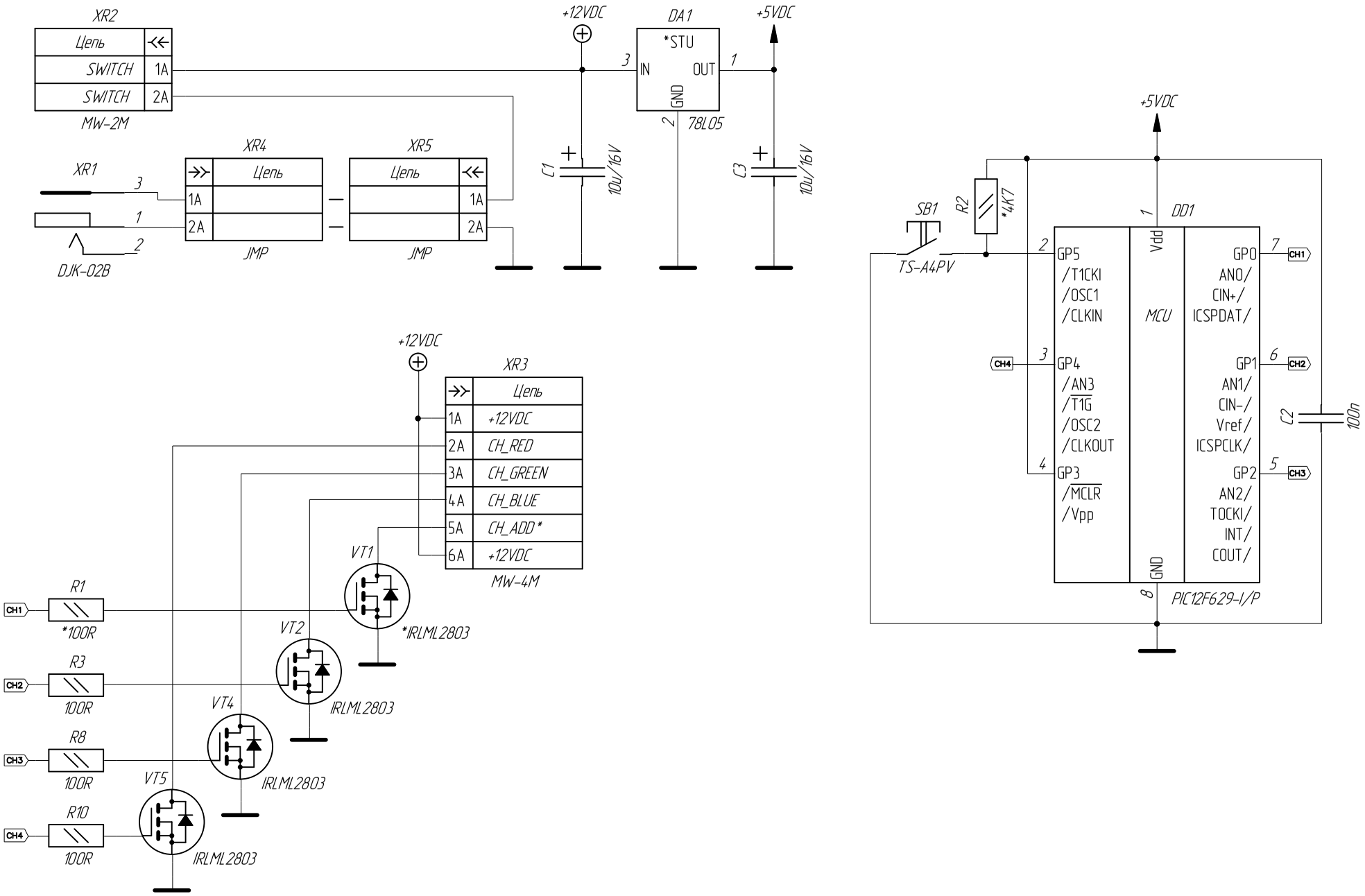
XR2
Цепь
SWITCH 1A
SWITCH 2A
MW-2M
XR1
DJK-02B
XR4
XR5
Цепь
JMP
+12VDC
DA1
*STU
IN
OUT
GND
78L05
+5VDC
C1
10u/16V
C3
10u/16V
XR3
+12VDC
CH_RED
CH_GREEN
CH_BLUE
CH_ADD*
MW-4M
R1
*100R
R3
100R
R8
100R
R10
100R
VT1
VT2
VT4
VT5
*IRLML2803
IRLML2803
SB1
TS-A4PV
R2
*4K7
DD1
GP5
/T1CKI
/OSC1
/CLKIN
GP4
/AN3
/T1G
/OSC2
/CLKOUT
GP3
/MCLR
/Vpp
Vdd
MCU
GND
GP0
AN0/
CIN+/
ICSPDAT/
GP1
AN1/
CIN-/
Vref/
ICSPCLK/
GP2
AN2/
TOCKI/
INT/
COUT/
PIC12F629-I/P
C2
100n
CH1
CH2
CH3
CH4